Engineering Specification

WH-240-H-Y-*D-PP *(Non-reversing)*
WH-240-HAC-Y-*D-PP *(Reversing)*

High Temperature Commercial Water to Water Heat Pump / Chiller
Dual Refrigeration Circuit, R513a, 60 Hz
Nominal Size 20 Ton

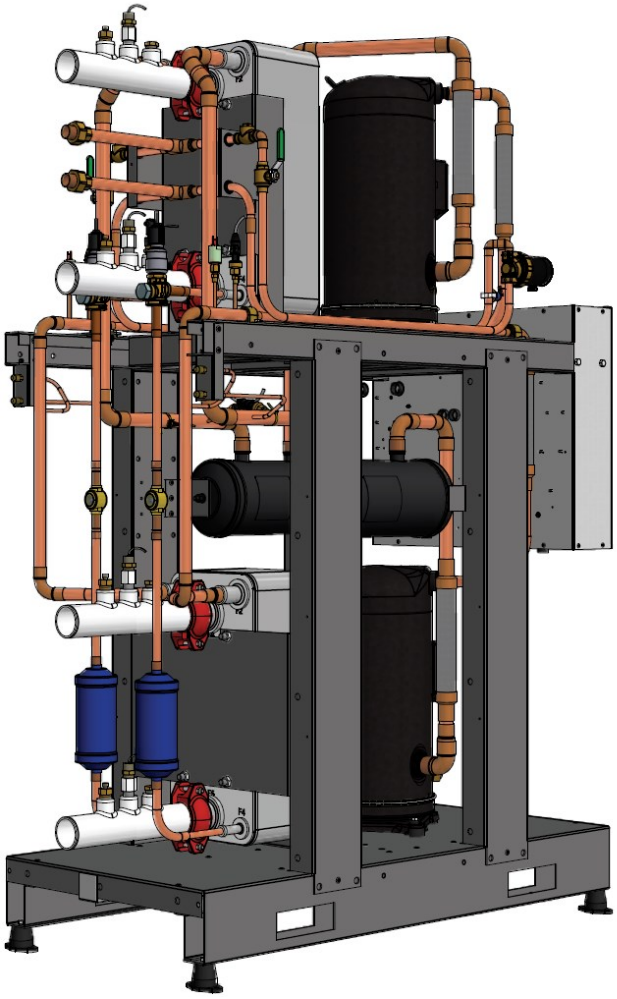

Maritime Geothermal Ltd.
P.O. Box 2555, 170 Plantation Road
Petitcodiac, NB E4Z 6H4
(506) 756-8135

info@nordicghp.com
www.nordicghp.com
002779SPC-01

Model Nomenclature

WH—240—H—Y—5D—PP—xx

Series:
WH = high temperature liquid to water

Nominal Size:
150 = 12 ton
185 = 17 ton
240 = 20 ton
300 = 23 ton
400 = 30 ton
500 = 40 ton
600 = 50 ton
800 = 65 ton

Functions:
H = heating (no reversing valve)
HAC = heating/cooling (reversing valve)

Refrigerant:
Y = R513a

Revision:
01, 02 etc.

Indoor Loop Exchanger:
P = brazed plate

Outdoor Loop Exchanger:
P = brazed plate

Compressor Type:
D = dual scroll

Voltage Code:
2 = 208-3-60
4 = 460-3-60
5 = 575-3-60

APPLICATION TABLE

MODEL SIZE	FUNCTION	REFRIGERANT	VOLTAGE	COMPRESSOR	OUTDOOR COIL	INDOOR COIL	REVISIONS				
WH-240	H HAC	Y	2 4 5	D	P	P	01				

This document applies only to the models and revisions listed in this table.

Maritime Geothermal Ltd. has a continuous improvement policy and reserves the right to modify specification data at any time without prior notice .

Design Features

- Low GPW R513a refrigerant, complies with 2025 environmental standards while retaining A1 (non-flammable) classification
- Capable of 160°F (71°C) indoor loop LLT, with a minimum outdoor loop temperature of 45°F (7°C)
- 11 gauge heavy duty standalone frame with slots for 4-side fork lift access
- Designed to be lined up side by side with zero side clearance, for multiple-unit installations
- TUV listed for electrical certification (CSA/UL/ETL equivalent)
- Rubber mounting feet (optional spring foot kit, below)
- Insulated heat exchangers and piping
- Dual refrigeration circuits: each circuit operates independently
- Scroll compressors
- Suction line accumulator (each circuit)
- Liquid line solid core filter-dryer (each circuit)
- Liquid line sight glass (each circuit)
- Electronic Expansion Valves (EEVs) (each circuit)
- 4-way reversing valve on reversing ***-HAC*** units (each circuit)
- Refrigeration service ports for each refrigeration circuit (1/4” Schrader)
- 316 stainless steel brazed plate heat exchangers
- 316 stainless piping with 2” Victaulic connections for the outdoor and indoor loops
- 3-phase protection
- High and low pressure sensors (each circuit)
- Suction line temperature sensor (each circuit)
- Manual reset high pressure control (each circuit)
- Flow switch for outdoor loop, and also for indoor loop on reversing ***-HAC*** units
- Temperature sensor and P/T port on all four water lines (Outdoor In, Outdoor Out, Indoor In and Indoor Out)
- Advanced control board with BACNet interface for remote operation and data access including all sensor data and alarm conditions, PWM outputs (or 0-10VDC), configurable analog inputs (0-10VDC or 4-20mA) with on board 5VDC, 12VDC and 24VDC power supplies.
- USB port for complete data access using laptop computer and provided software; including real-time charting, data logging, and diagnostic functionality with manual override operation
- 2 x 16 LCD display for control and data access
- Random start on power up (0-2 minutes)
- Dry contacts for external pump control (24VAC 5A MAX)
- 16ga satin galvanized acoustically insulated (1” thick) enclosure with powder coat finish and six removable panels, offering complete 360 degree access for servicing

Available Accessories

- Spring foot kit, for use where floors have deflection (e.g. mezzanines)
- Tank temperature sensor(s) for standalone configuration

Design Features

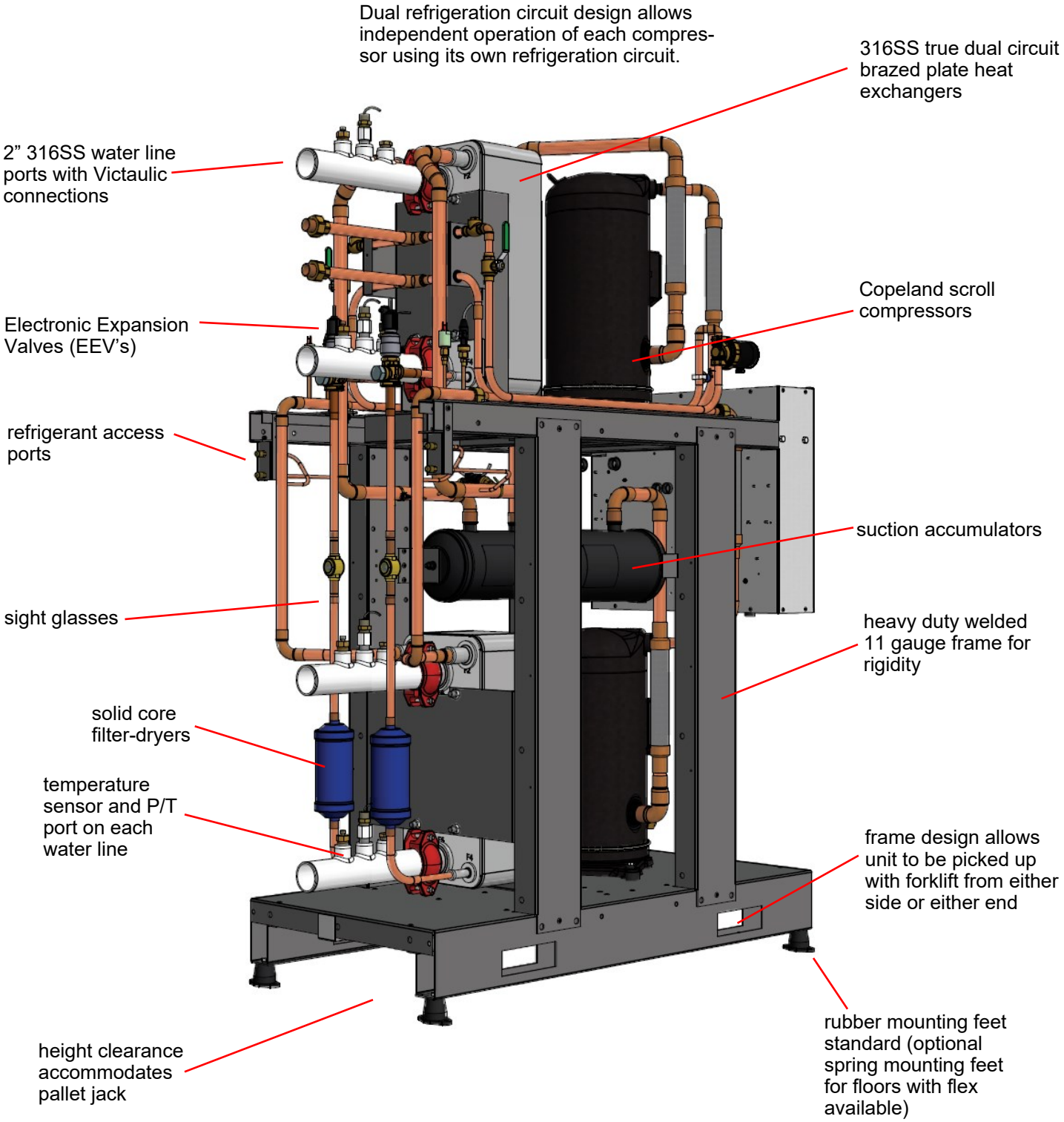

Design Features

ENCLOSURE

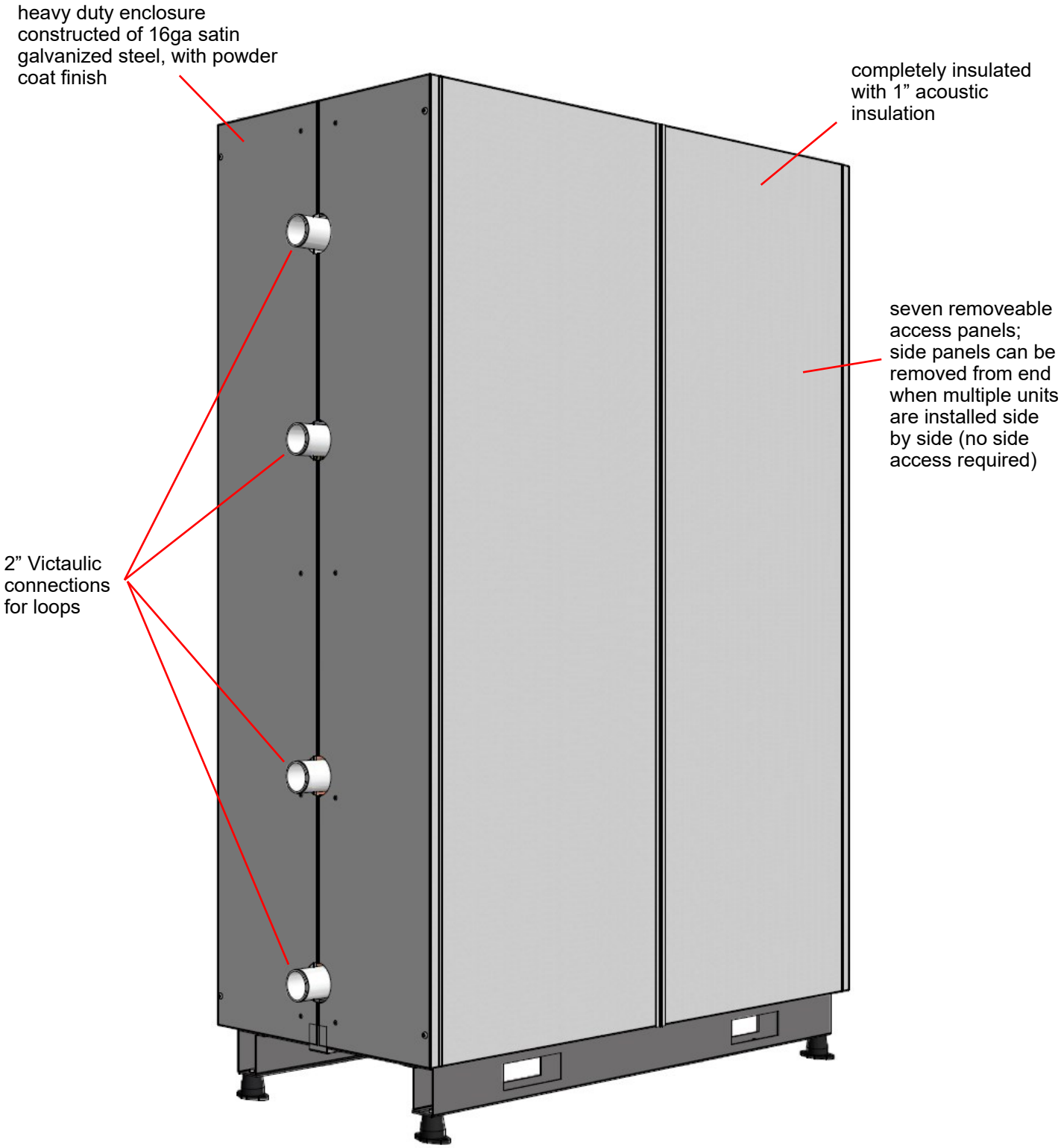

Dimensions

WITHOUT ENCLOSURE

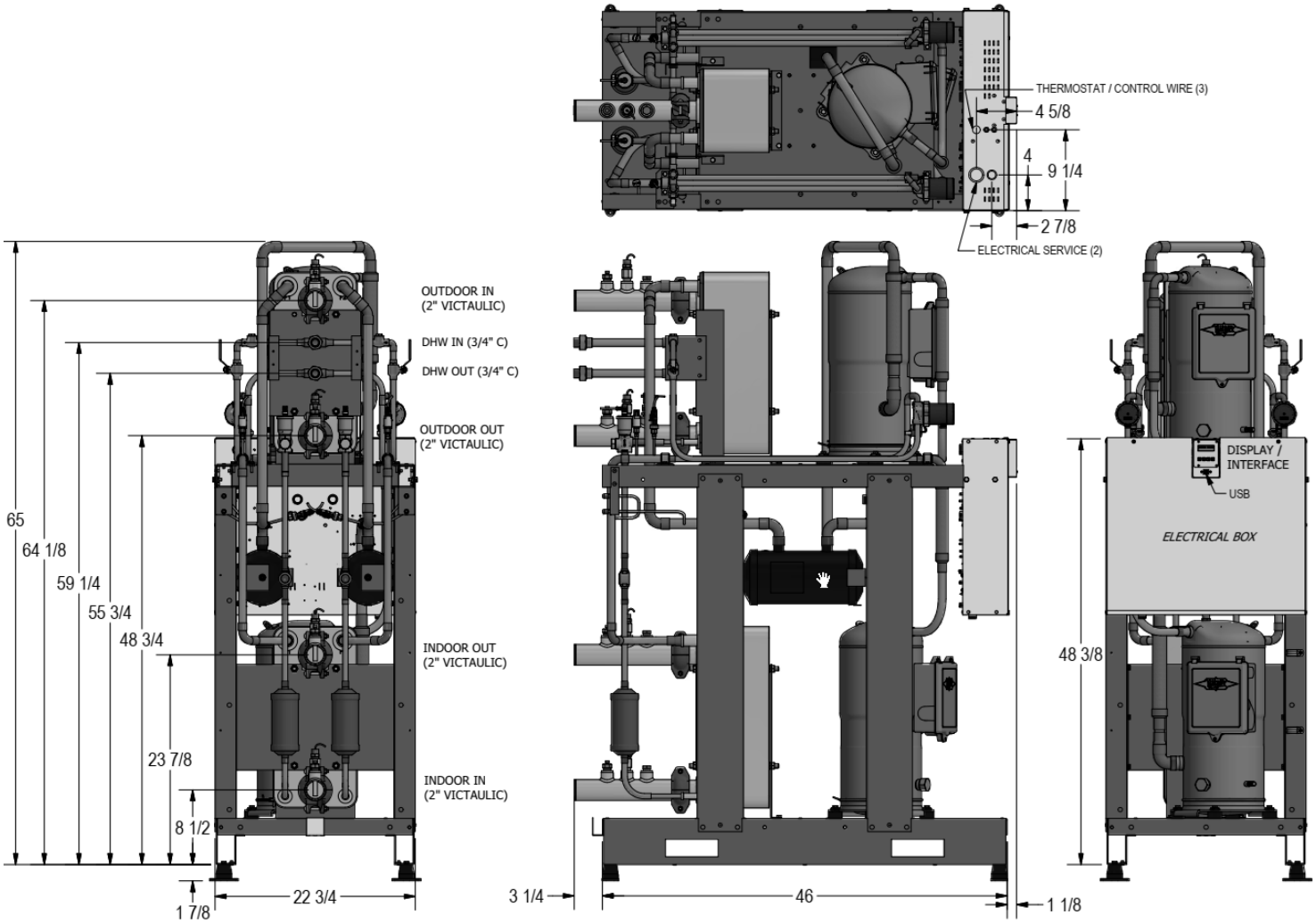

All dimensions in inches.

Dimensions

WITH ENCLOSURE

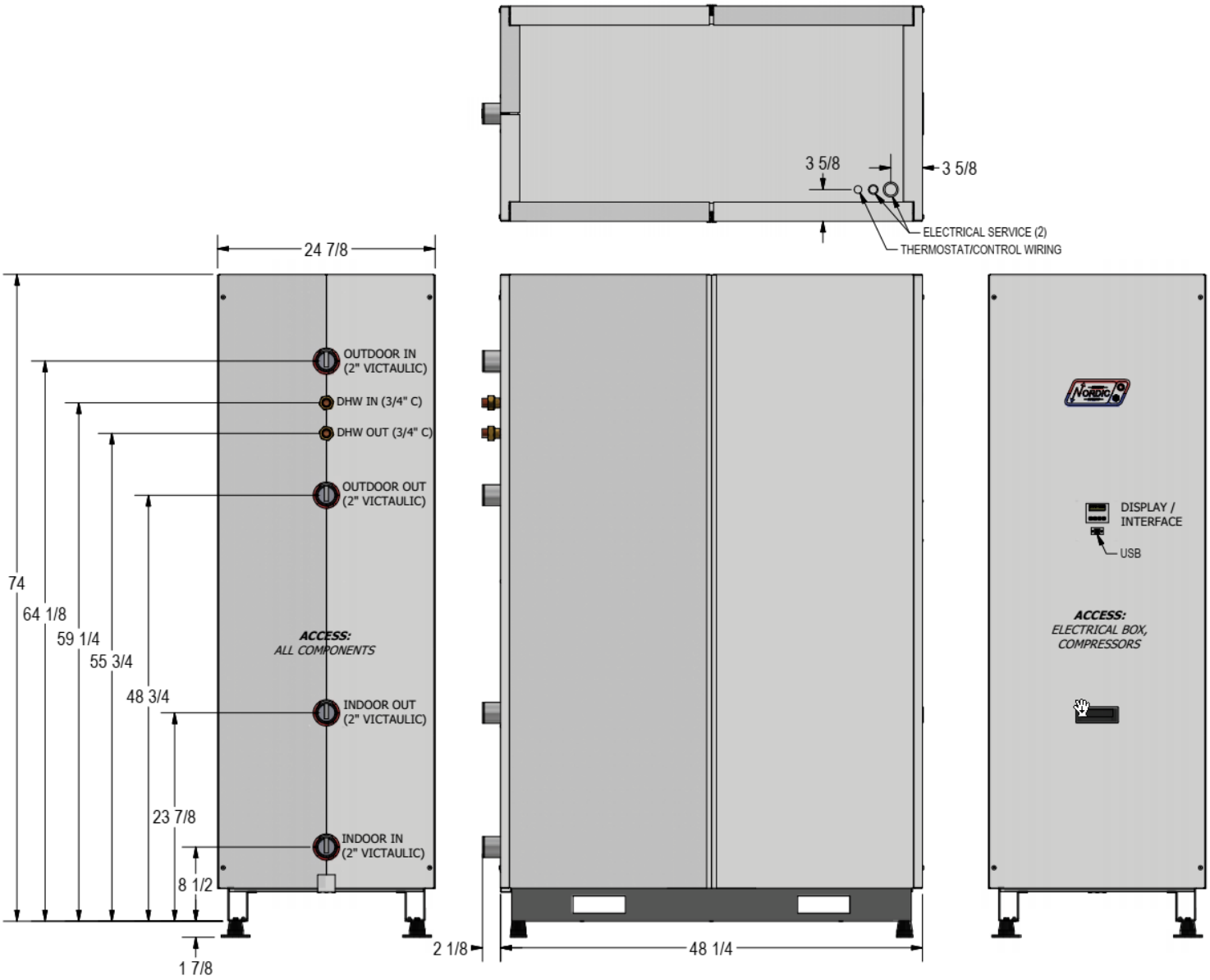

RECOMMENDED BACK CLEARANCE:
3 FT + HEADERS

NO SIDE CLEARANCE REQUIRED

RECOMMENDED FRONT CLEARANCE:
3 FT

All dimensions in inches.

Specifications

Electrical Specifications (R513a)									
Nomenclature Identifier	Power Supply			Compressors (each)		FLA	MCA	Maximum Fuse/Breaker	Minimum Wire Size
	V-ø-Hz	MIN	MAX	RLA	LRA	Amps	Amps	Amps	ga
2	**208-3-60**	**187**	**229**	**37.2**	**239**	**75.3**	**84.6**	**125**	**#2-3**
4	**460-3-60**	**414**	**506**	**20.1**	**125**	**40.7**	**45.7**	**60**	**#6-3**
5	**575-3-60**	**518**	**632**	**12.8**	**80**	**26.1**	**29.3**	**40**	**#8-3**

Refrigerant Charge (Per Circuit)				
MODEL	TYPE	lb	kg	Oil Type
WH-240	R513a	10	*4.5*	POE

- Oil capacity is marked on the compressor label.
- **Refrigerant charge is subject to revision;** actual charge is indicated on the unit nameplate.

Shipping Information				
MODEL	WEIGHT	DIMENSIONS in (cm)		
	lb. (kg)	L	W	H
WH-240	1351 (614)	78 (198)	32 (81)	82 (208)

Specifications

Flow Rates & Volumes										
MODEL	Nominal Size (60Hz)	Recommended Liquid Flow (Outdoor & Indoor Loops)				Heat Pump's Indoor Loop Holdup Volume		Heat Pump's Outdoor Loop Holdup Volume	
		100% CAPACITY (2 COMPRESSORS)		50% CAPACITY (1 COMPRESSOR)					
	tons	gpm(US)	*L/s*	gpm(US)	*L/s*	US gal	*L*	US gal	*L*
WH-240	20	60	*3.8*	30	*1.9*	3.10	*11.7*	3.10	*11.7*

Loop Pressure Drop Data			INDOOR (water 130°F)		INDOOR (water 104°F)		OUTDOOR (water 50°F)		OUTDOOR (15% methanol 32°F)		OUTDOOR (35% prop.glycol 32°F)	
	gpm	***L/s***	**psi**	***kPa***	**psi**	***kPa***	**psi**	***kPa***	**psi**	***kPa***	**psi**	***kPa***
WH-240	32	*2.0*	0.8	*5.5*	0.8	*5.5*	0.9	*6.2*	1.0	*6.9*	1.7	*12*
	36	*2.3*	1.0	*6.9*	1.0	*6.9*	1.1	*7.6*	1.2	*8.3*	2.0	*14*
	40	*2.5*	1.2	*8.3*	1.2	*8.3*	1.3	*9.0*	1.5	*10*	2.2	*15*
	48	*3.0*	1.6	*11*	1.7	*12*	1.8	*12*	2.0	*14*	2.5	*17*
	60	*3.8*	2.5	*17*	2.6	*18*	2.7	*19*	2.9	*20*	3.3	*23*
	72	*4.5*	3.5	*24*	3.7	*26*	3.8	*26*	4.0	*28*	4.1	*28*

WH-SERIES Operating Temperature Limits					
Loop	**Mode**	**Parameter**	**(°F)**	***(°C)***	**Note**
Indoor Loop	**HEATING** (indoor is hot loop)	Minimum EWT	70 - 110	*21 - 43*	Use formula (Outdoor EWT + 20°F) or (Outdoor EWT + 11°C). Lower temperatures require 0-10VDC modulating water valve, or manual flow reduction at startup.
		Maximum LWT	160	*71*	
	COOLING (reversing HAC units only, indoor is cold loop)	Minimum LWT	37	*3*	EWT should normally be 45°F or greater.
		Maximum ELT	90	*32*	0-10VDC modulating water valve required on indoor loop above this temperature, or manual flow reduction at startup
Outdoor Loop	**HEATING** (outdoor is cold loop)	Minimum LWT	37	*3*	EWT should normally be 45°F or greater.
		Maximum ELT	90	*32*	0-10VDC modulating water valve required on outdoor loop above this temperature to limit suction pressure *(contact Engineering for firmware revision of this feature)*
	COOLING (reversing HAC units only, outdoor is hot loop)	Minimum EWT	70 - 110	*21 - 43*	Use formula (Outdoor EWT + 20°F) or (Outdoor EWT + 11°C). Lower temperatures require 0-10VDC modulating water valve.
		Maximum LLT/LWT	160	*71*	

EWT: Entering Water Temperature
LWT: Leaving Water Temperature

Values in these tables are for rated liquid and water flows.

Performance Tables - WH-Series

* Cooling via reversing models (-HAC), or switching indoor/outdoor
** Lower cooling mode outdoor loop ELT's may require flow control
† Compressor current is for 460-3-60.
[Multiply by 2.2 for 208-3-60, by 0.8 for 575-3-60.]

WH-240-H**-Y-*D-PP

R513a, 60 Hz, 2 x ZH50KCE-TFD (460-3-60)

	OUTDOOR LOOP (Water)						ELECTRICAL		INDOOR LOOP (Water)						
	ELT (°F)	Evap. Temp.	Flow (gpm)	LLT (°F)	Delta T (°F)	Heat Abs. (Btu/hr)	Compressor Current (A)†	Input Power (W)	EWT (°F)	Cond. Temp.	Flow (gpm)	LWT (°F)	Delta T (°F)	**Heating** (Btu/hr)	**COP_H**
HEATING	50	40	60	46	-4.2	127,000	24.1	13,656	114	125	60	120	5.8	**172,800**	**3.71**
	60	48	60	55	-5.1	153,900	24.9	14,134	113	126	60		6.8	**201,300**	**4.17**
	70	57	60	64	-6.2	185,200	25.8	14,634	112	126	60		7.9	**234,300**	**4.69**
	80	65	60	73	-7.4	221,500	26.7	15,190	111	126	60		9.2	**272,500**	**5.26**
	90	74	60	81	-8.8	263,700	27.7	15,838	109	126	60		10.7	**316,900**	**5.86**
	50	41	60	46	-3.7	112,200	26.1	16,108	134	145	60	140	5.6	**166,300**	**3.03**
	60	49	60	56	-4.5	135,500	26.8	16,576	134	145	60		6.5	**191,200**	**3.38**
	70	58	60	65	-5.4	161,900	27.6	17,018	133	145	60		7.4	**219,100**	**3.77**
	80	67	60	74	-6.4	192,500	28.3	17,500	132	146	60		8.5	**251,400**	**4.21**
	90	75	60	82	-7.6	227,200	29.1	18,016	130	146	60		9.7	**287,900**	**4.68**
	50	42	60	47	-3.0	91,400	29.8	19,587	155	165	60	160	5.3	**157,400**	**2.36**
	60	51	60	56	-3.7	111,500	30.5	20,090	154	165	60		6.1	**179,200**	**2.61**
	70	59	60	66	-4.5	134,100	31.2	20,557	153	166	60		6.9	**203,400**	**2.90**
	80	68	60	75	-5.3	159,200	31.9	21,015	152	166	60		7.8	**230,100**	**3.21**
	90	77	60	84	-6.3	188,200	32.6	21,493	151	166	60		8.8	**260,700**	**3.55**

	ELT (°F)	Cond. Temp.	Flow (gpm)	LLT (°F)	Delta T (°F)	Heat Rej. (Btu/hr)	Compressor Current (A)†	Input Power (W)	EWT (°F)	Evap. Temp.	Flow (gpm)	LWT (°F)	Delta T (°F)	**Cooling** (Btu/hr)	**EER**
COOLING*	50	73	60	57	7.4	**207,400**	18.5	7,849	54	37	60	48	-6.1	**181,600**	**23.1**
	55	78	60	62	7.3	**204,800**	19.1	8,313		37	60	48	-5.9	**177,400**	**21.3**
	60	83	60	67	7.2	**202,600**	19.6	8,813		38	60	48	-5.8	**173,500**	**19.7**
	65	88	60	72	7.2	**200,500**	20.2	9,354		38	60	48	-5.7	**169,500**	**18.1**
	70	93	60	77	7.1	**198,100**	20.8	9,935		38	60	48	-5.5	**165,100**	**16.6**
	75	98	60	82	7.0	**195,900**	21.5	10,561		39	60	48	-5.4	**160,800**	**15.2**
	80	103	60	87	6.9	**194,000**	22.3	11,236		39	60	48	-5.2	**156,500**	**13.9**
	85	108	60	92	6.8	**191,900**	23.0	11,960		40	60	49	-5.1	**152,000**	**12.7**
	90	113	60	97	6.7	**189,700**	23.9	12,738		40	60	49	-4.9	**147,100**	**11.5**
	95	118	60	102	6.7	**187,800**	24.8	13,572		41	60	49	-4.8	**142,300**	**10.5**

METRIC

	OUTDOOR LOOP (Water)						ELECTRICAL		INDOOR LOOP (Water)						
	ELT (°C)	Evap. Temp.	Flow (L/s)	LLT (°C)	Delta T (°C)	Heat Abs. (kW)	Compressor Current (A)†	Input Power (W)	EWT (°C)	Cond. Temp.	Flow (L/s)	LWT (°C)	Delta T (°C)	**Heating** (kW)	**COP_H**
HEATING	10.0	4.2	3.8	7.7	-2.3	37.2	24.1	13,656	45.7	51.8	3.8	49	3.2	**50.6**	**3.71**
	15.6	8.9	3.8	12.8	-2.8	45.1	24.9	14,134	45.1	51.9	3.8		3.8	**59.0**	**4.17**
	21.1	13.6	3.8	17.7	-3.4	54.3	25.8	14,634	44.5	52.1	3.8		4.4	**68.7**	**4.69**
	26.7	18.3	3.8	22.6	-4.1	64.9	26.7	15,190	43.8	52.3	3.8		5.1	**79.9**	**5.26**
	32.2	23.1	3.8	27.3	-4.9	77.3	27.7	15,838	42.9	52.4	3.8		5.9	**92.9**	**5.86**
	10.0	4.9	3.8	7.9	-2.1	32.9	26.1	16,108	56.9	62.7	3.8	60	3.1	**48.7**	**3.03**
	15.6	9.7	3.8	13.1	-2.5	39.7	26.8	16,576	56.4	62.9	3.8		3.6	**56.0**	**3.38**
	21.1	14.4	3.8	18.1	-3.0	47.5	27.6	17,018	55.9	63.0	3.8		4.1	**64.2**	**3.77**
	26.7	19.2	3.8	23.1	-3.6	56.4	28.3	17,500	55.3	63.2	3.8		4.7	**73.7**	**4.21**
	32.2	23.9	3.8	28.0	-4.2	66.6	29.1	18,016	54.6	63.3	3.8		5.4	**84.4**	**4.68**
	10.0	5.6	3.8	8.3	-1.7	26.8	29.8	19,587	68.2	73.9	3.8	71	2.9	**46.1**	**2.36**
	15.6	10.4	3.8	13.5	-2.1	32.7	30.5	20,090	67.7	74.1	3.8		3.4	**52.5**	**2.61**
	21.1	15.2	3.8	18.6	-2.5	39.3	31.2	20,557	67.3	74.3	3.8		3.8	**59.6**	**2.90**
	26.7	20.0	3.8	23.8	-2.9	46.7	31.9	21,015	66.8	74.4	3.8		4.3	**67.4**	**3.21**
	32.2	24.8	3.8	28.7	-3.5	55.2	32.6	21,493	66.2	74.6	3.8		4.9	**76.4**	**3.55**

	ELT (°C)	Cond. Temp.	Flow (L/s)	LLT (°C)	Delta T (°C)	Heat Rej. (W)	Compressor Current (A)†	Input Power (W)	EWT (°C)	Evap. Temp.	Flow (L/s)	LWT (°C)	Delta T (°C)	**Cooling** (W)	**COP_C**
COOLING*	10.0	23	3.8	14.1	4.1	**60.8**	18.5	7,849	12	3	3.8	8.6	-3.4	**53.2**	**6.77**
	12.8	26	3.8	16.9	4.1	**60.0**	19.1	8,313		3	3.8	8.7	-3.3	**52.0**	**6.24**
	15.6	28	3.8	19.6	4.0	**59.4**	19.6	8,813		3	3.8	8.8	-3.2	**50.9**	**5.77**
	18.3	31	3.8	22.3	4.0	**58.8**	20.2	9,354		3	3.8	8.8	-3.2	**49.7**	**5.30**
	21.1	34	3.8	25.0	3.9	**58.1**	20.8	9,935		4	3.8	8.9	-3.1	**48.4**	**4.86**
	23.9	37	3.8	27.8	3.9	**57.4**	21.5	10,561		4	3.8	9.0	-3.0	**47.1**	**4.45**
	26.7	39	3.8	30.5	3.8	**56.9**	22.3	11,236		4	3.8	9.1	-2.9	**45.9**	**4.07**
	29.4	42	3.8	33.2	3.8	**56.2**	23.0	11,960		4	3.8	9.2	-2.8	**44.6**	**3.72**
	32.2	45	3.8	35.9	3.7	**55.6**	23.9	12,738		5	3.8	9.3	-2.7	**43.1**	**3.37**
	35.0	48	3.8	38.7	3.7	**55.0**	24.8	13,572		5	3.8	9.3	-2.7	**41.7**	**3.08**

W/WH-150 to 1000 High Voltage Schematic Diagram

Dual Circuit Scroll / Optional Domestic Hot Water

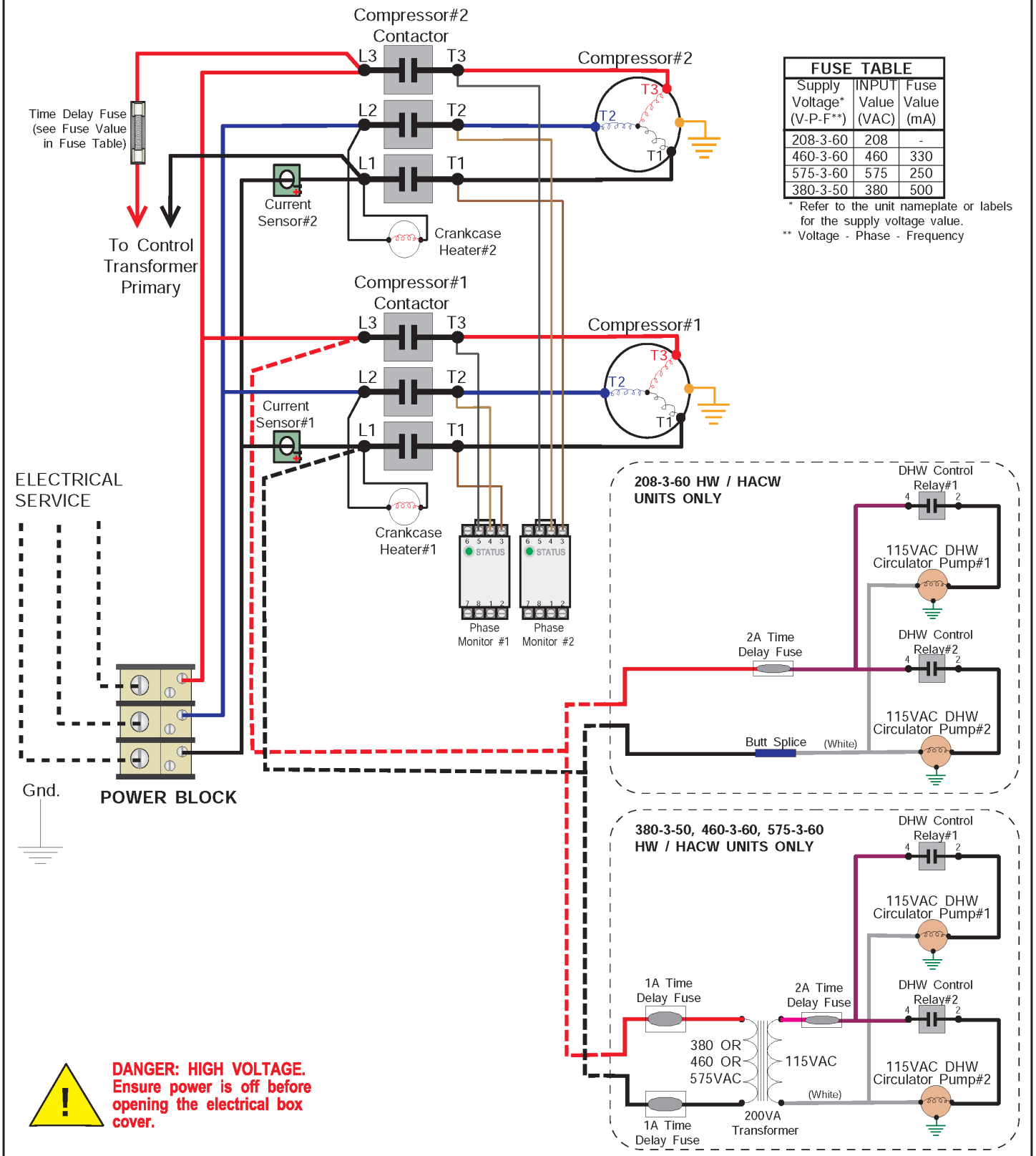

FUSE TABLE		
Supply Voltage* (V-P-F**)	INPUT Value (VAC)	Fuse Value (mA)
208-3-60	208	-
460-3-60	460	330
575-3-60	575	250
380-3-50	380	500

* Refer to the unit nameplate or labels for the supply voltage value.
** Voltage - Phase - Frequency

DANGER: HIGH VOLTAGE. Ensure power is off before opening the electrical box cover.

REV	ECO #	IMPL BY	APVD BY	DATE
02	ISSUE 03	D. RHEAULT	D. RHEAULT	24-Jun-2022
02	ISSUE 02	D. RHEAULT	D. RHEAULT	15-Mar-2022
02	Reformatted	D. RHEAULT	D. RHEAULT	01-Nov-2017
01	Initial Release	C. GEDDES	C. GEDDES	18-Oct-2012

Drawn By Chris Geddes	Date 18-Oct-2012	
Checked By Chris Geddes	Date 18-Oct-2012	
Approved By (ENG) Chris Geddes	Date 18-Oct-2012	
Approved By (MFG)	Date	
Approved By	Date	

MARITIME GEOTHERMAL LTD.
170 Plantation Rd.
Petitcodiac, NB
E4Z 6H4

Drawing Name: W/WH-150 to W/WH-1000-H***-**-*D-PP High Voltage Schematic Diagram

Size	Drawing Number	Drawing Rev	SHEET
A	001717SCH	02(i3)	1 of 1

W/WH-150 to 1000 Low Voltage Schematic Diagram - Dual Circuit / Dual Compressor

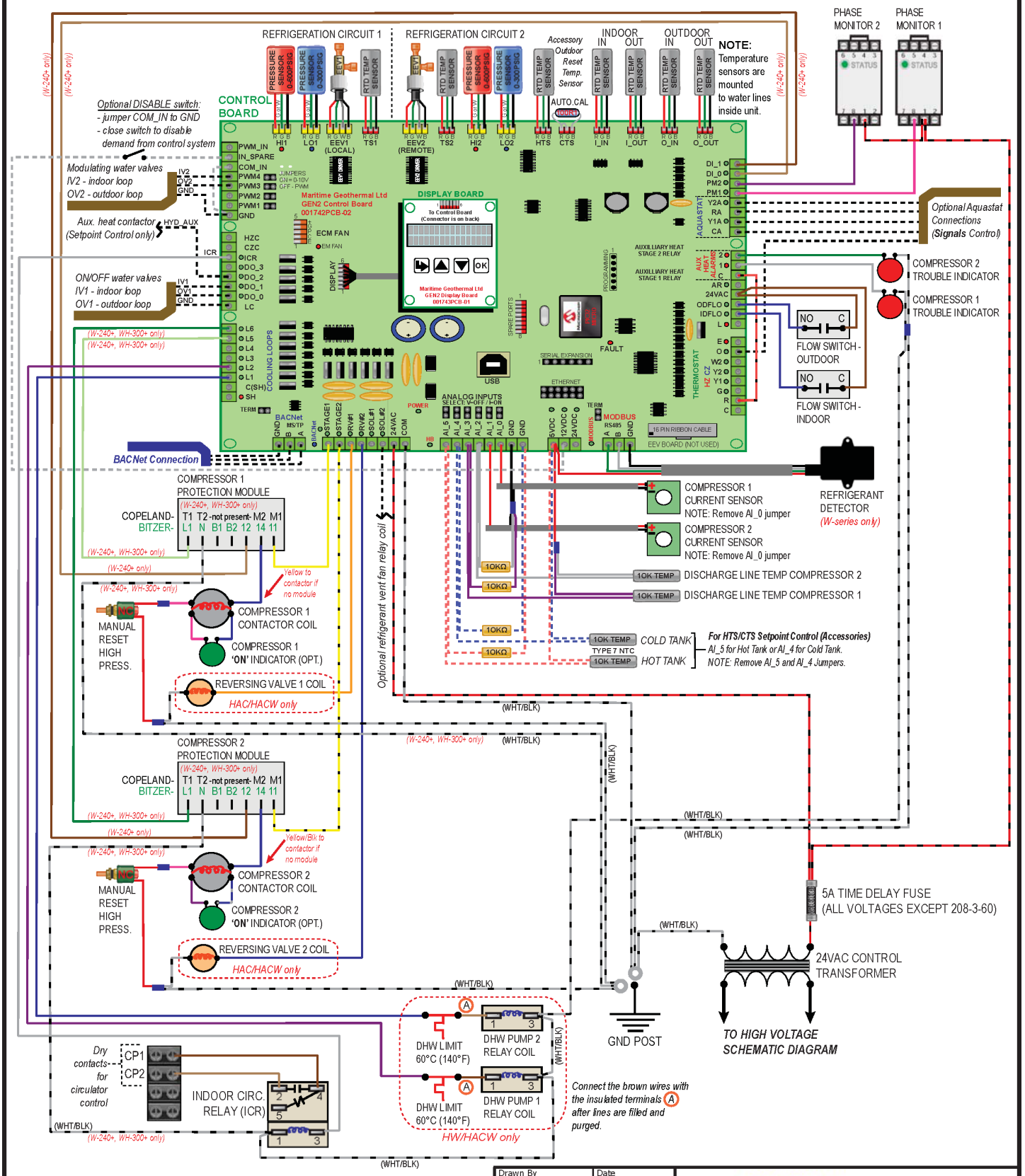

01	Initial Release	D. RHEAULT	D. RHEAULT	27-SEP-2024
REV	ECO#	IMPL BY	APVD BY	DATE

Drawn By D. RHEAULT	Date 27-SEP-2024
Checked By D. RHEAULT	Date 27-SEP-2024
Eng. Approved By	Date
Mfg. Approved By	Date
Approved By	Date

MARITIME GEOTHERMAL LTD.
P.O. Box 2555
170 Plantation Rd.
Petitcodiac, NB CANADA E4Z 6H4

Drawing Name
W/WH-150~1000-H***-X/Y-*D-PP
Low Voltage Schematic Diagram

Size	Drawing Number	Drawing Rev	Sheet
LET	002752SCH	01	1 / 1

W/WH-150 to 1000 Electrical Box Diagram

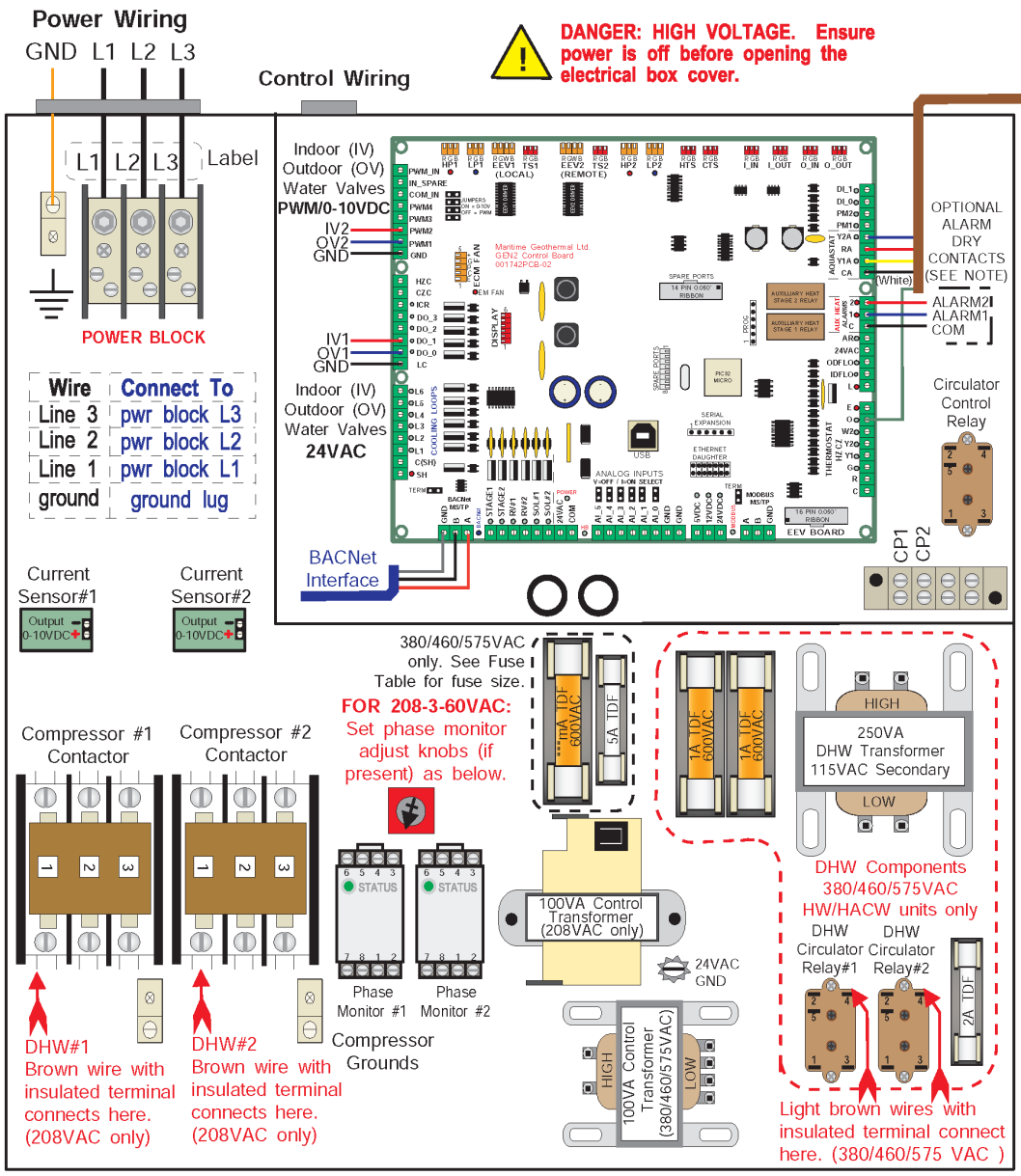

FUSE TABLE ***	
Supply Voltage	Fuse Value*
208-3-60	--------
460-3-60	330mA
575-3-60	250mA
380-3-50	500mA

*Value is marked in electrical box.

Use PC App or LCD menus to select 1 of 3 Control Methods:

1. **BACnet**
2. **Hardwired (24VAC signals)**
3. **Setpoint Control (internal)**

1. BACnet (MS/TP RS-485)

Use twisted pair shielded-conductor cable.

A - Communication
B - Communication
GND - Ground

SYSTEM_Y1A: Stage 1 (compr.1)
SYSTEM_Y2A: Stage 2 (compr.2)
SYSTEM_O: Htg/Cooling Mode (active in cooling)

2. Hardwired (24VAC)

Use an 18-4 or 18-5 cable.

C - 24VAC Common
R - 24VAC Hot
Y1A - Stage 1 (Compressor 1)
Y2A - Stage 2 (Compressor 2)
O - Heating/Cooling Mode (active for cooling mode)

A dry contact from "R" to "Y1A" will start compressor #1.

A dry contact from "R" to "Y2A" will start compressor #2.

A dry contact from "R" to "O" will activate cooling mode (for both compressors).

3. Setpoint Control

Unit will be controlled by internal water line temperature sensors. See manual for setup instructions.

DHW NOTE: If the heat pump is to be operated without the hot water circulators connected to the water tank and flooded with water, remove the brown (or light brown) wire with the insulated terminal from the location(s) shown in the diagram above. **The pumps are water lubricated and must not be run dry.**

IMPORTANT NOTES:

- **3 PHASE SCROLL COMPRESSORS** must rotate in the proper direction. After the initial connection, if the phase protection module(s) indicate a fault on power up, turn the power off and reverse the L1 and L2 supply leads. Turn the power on and clear the fault(s).

- **IMPORTANT:** Ensure sufficient antifreeze concentration is used and correctly set in control board via the PC App, so that the correct low pressure cutout value is implemented to prevent freezing conditions. Failure to do so could cause the heat exchanger to freeze and rupture, voiding the warranty.

- **Stages Y1A & Y2A** are completely independent (unlike with residential "Ultratech" compressors). Each may be used at any time.
- **Anti-short cycle timer** of 5 minutes exists for each compressor.
- **Alarm1 and Alarm2** signals are dry contacts (NO). Connect the signal source to COM. Alarm1 is for stage 1 (Y1A) and Alarm2 is for stage 2 (Y2A). MAX 1amp @ 24VAC
- **CP1 and CP2** are a dry contact that can be used to turn on circulator pumps when either compressor starts. In Setpoint Control mode, it is indoor circulators only (sampling). MAX 5amps @ 24VAC
- **Water Valve:** 24VAC is present across OV1/IV1 and GND to power an external ON/OFF water valve when either compressor starts. Modulating water valves can be connected between OV2/IV2 and GND. MAX 1amp @ 24VAC

REV	ECO #	IMPL BY	APVD BY	DATE
02	ISSUE 03	D. RHEAULT	D. RHEAULT	24-Jun-2022
02	ISSUE 02	D. RHEAULT	D. RHEAULT	15-Mar-2022
02	Reformatted	D. RHEAULT	D. RHEAULT	01-Nov-2017
01	Initial Release	C. GEDDES	C. GEDDES	18-Oct-2012

Drawn By Chris Geddes	Date 18-Oct-2012	
Checked By Chris Geddes	Date 18-Oct-2012	
Approved By (ENG) Chris Geddes	Date 18-Oct-2012	
Approved By (MFG)	Date	
Approved By	Date	

MARITIME GEOTHERMAL LTD.
170 Plantation Rd.
Petitcodiac, NB
E4Z 6H4

Drawing Name W/WH-150 to W/WH-1000-H***-*-*D-PP
Electrical Box Diagram

Size	Drawing Number	Drawing Rev	SHEET
A	001719ELB	02(i3)	1 of 1

W/WH-150 to 1000-H/HW Refrigeration Circuit
[No Reversing Valve]

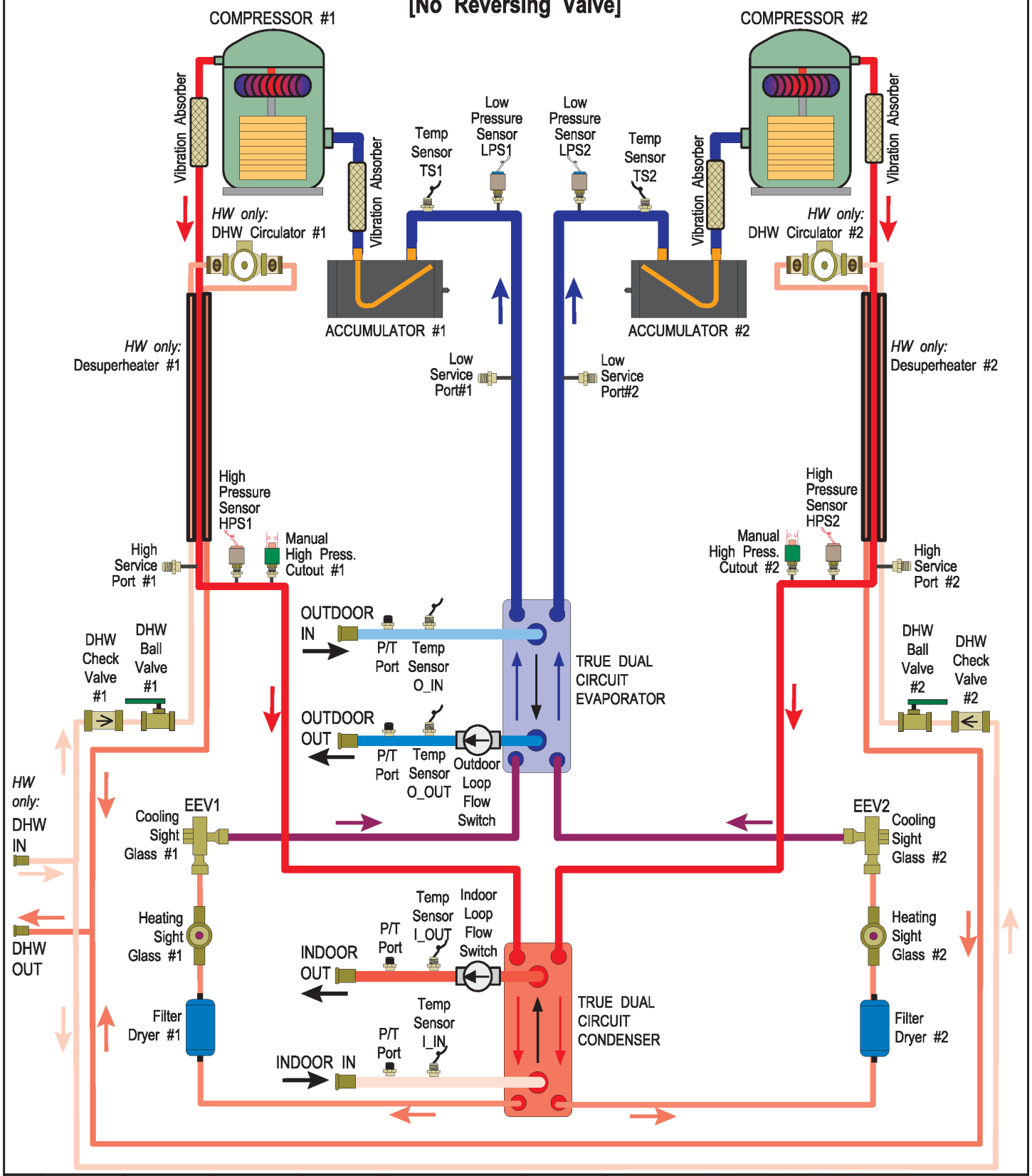

REV	ECO #	IMPL BY	APVD BY	DATE
01(i2)	ISSUE 02	D. RHEAULT	D. RHEAULT	1-Jun-2022
01	Initial Release	C. GEDDES	C. GEDDES	23-Oct-2012

Drawn By	Chris Geddes	Date	23-Oct-2012
Checked By	Chris Geddes	Date	23-Oct-2012
Approved By (ENG)	Chris Geddes	Date	23-Oct-2012
Approved By (MFG)		Date	
Approved By		Date	

MARITIME GEOTHERMAL LTD.
170 Plantation Rd.
Petitcodiac, NB
E4Z 6H4

Drawing Name: W/WH-150 to 1000-H(W) Refrigeration Circuit Diagram

Size	Drawing Number	Drawing Rev	SHEET
A	001720RCD	01(i2)	1 of 1

W/WH-150 to 1000-HAC/HACW Refrigeration Circuit

HEATING MODE

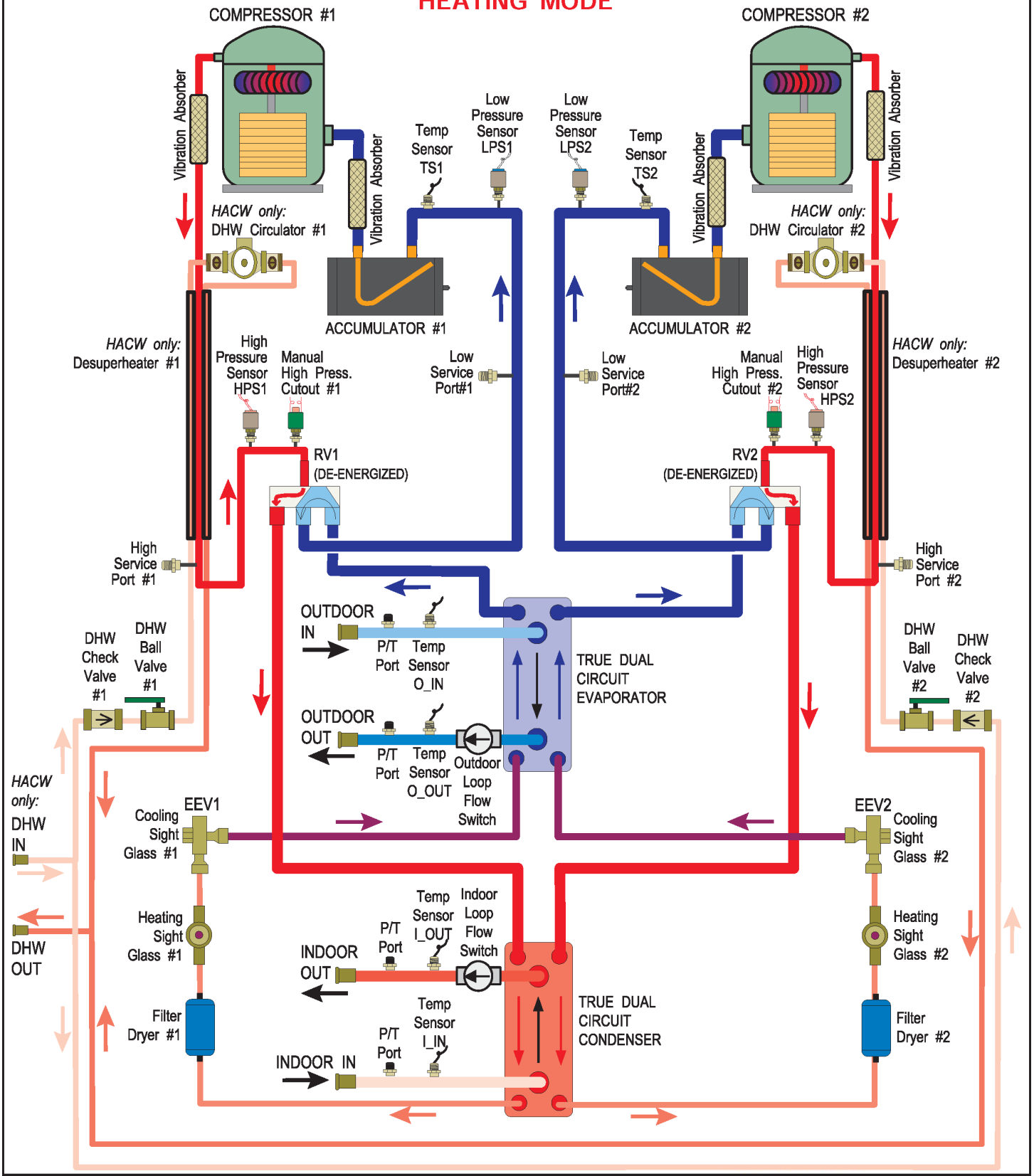

REV	ECO #	IMPL BY	APVD BY	DATE
02	000303	D. RHEAULT	D. RHEAULT	1-Jun-2022
01	Initial Release	C. GEDDES	C. GEDDES	23-Oct-2012

Drawn By Chris Geddes	Date 23-Oct-2012	
Checked By Chris Geddes	Date 23-Oct-2012	
Approved By (ENG) Chris Geddes	Date 23-Oct-2012	
Approved By (MFG)	Date	
Approved By	Date	

MARITIME GEOTHERMAL LTD.
170 Plantation Rd.
Petitcodiac, NB
E4Z 6H4

Drawing Name: W/WH-150 to 1000-HAC(W) Refrigeration Circuit Diagram - Heating Mode

Size	Drawing Number	Drawing Rev	SHEET
A	001721RCD	02	1 of 1

W/WH-150 to 1000-HAC/HACW Refrigeration Circuit

COOLING MODE

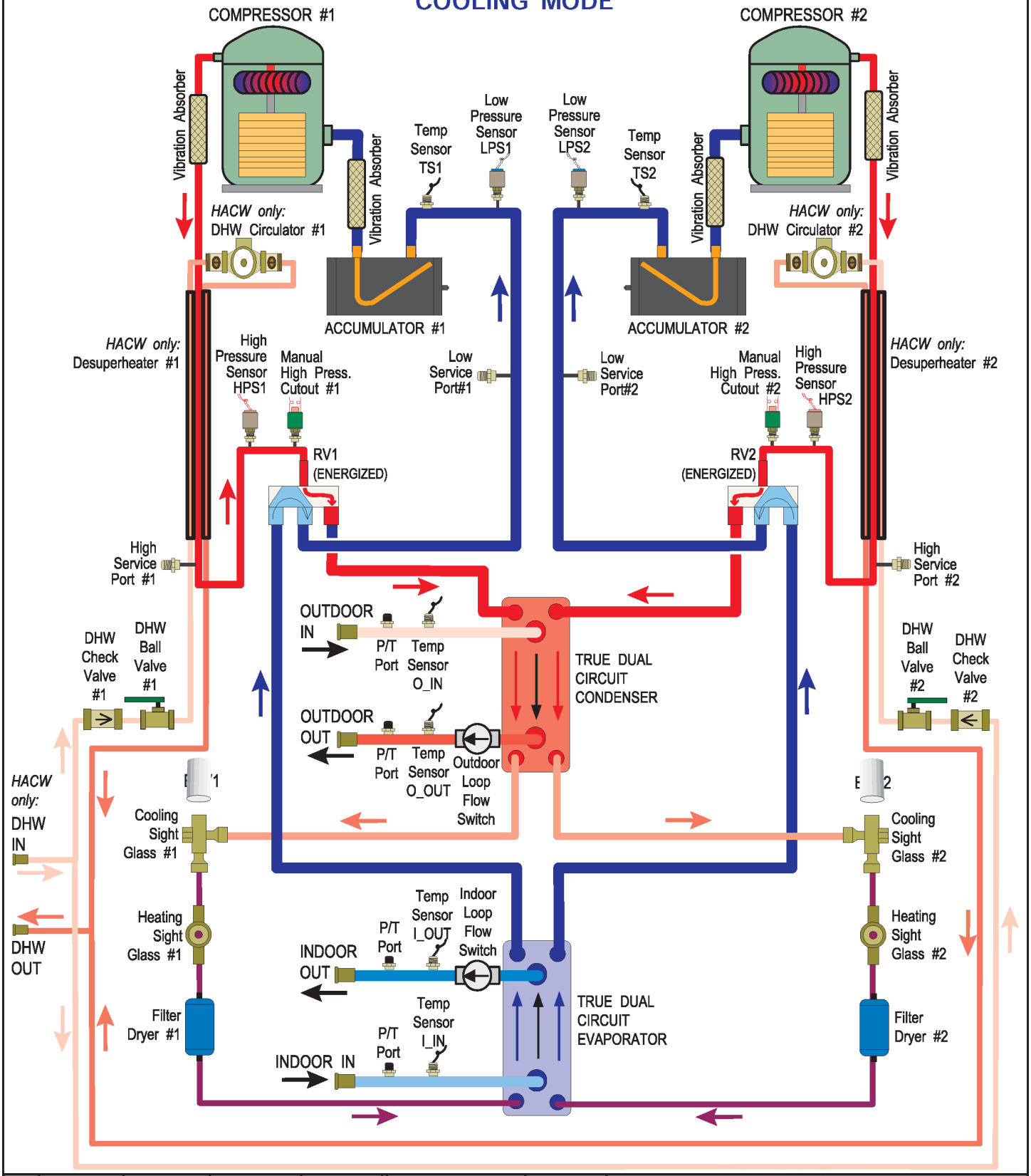

REV	ECO #	IMPL BY	APVD BY	DATE
02	000303	D. RHEAULT	D. RHEAULT	1-Jun-2022
01	Initial Release	C. GEDDES	C. GEDDES	23-Oct-2012

Drawn By Chris Geddes	Date 23-Oct-2012	
Checked By Chris Geddes	Date 23-Oct-2012	
Approved By (ENG) Chris Geddes	Date 23-Oct-2012	
Approved By (MFG)	Date	
Approved By	Date	

MARITIME GEOTHERMAL LTD.
170 Plantation Rd.
Petitcodiac, NB
E4Z 6H4

Drawing Name: W/WH-150 to 1000-HAC(W) Refrigeration Circuit Diagram - Cooling Mode

Size	Drawing Number	Drawing Rev	SHEET
A	001722RCD	02	1 of 1

BACnet Interface

The BACnet interface is an **MS/TP** connection via RS-485 twisted pair. BACnet **IP** is not available.
Recommended wire: 22-24 AWG single twisted pair, 100-120 Ohms impedance, 17pF/ft or lower capacitance, with braided or aluminum foil shield, such as Belden 9841 or 89841.

The connector on the control board is a three wire removable screw connector. The signals are as follows:
A: Communications line (+) (right pin)
B: Communications line (-) (middle pin)
C: Ground connection (left pin)

If connecting multiple units to one RS-485 connection point, connect the signal cable from the master building controller to the first unit. Connect the second unit to the first unit (in same connector), connect the third unit to the second unit, and so on until all units are connected (daisy-chain). Remove the TERM jumper (located just above the BACnet connector on control board) from all units except the last one. The shield ground should be connected only to the GND pin of the unit for single unit installations. For multiple units, the shield ground should only be connected to the GND pin of the last unit. The shield grounds for intermediate units should be connected together. The shield ground should be left unconnected at the building controller end for all cases.

Vendor: Maritime Geothermal Ltd.
Vendor ID: 260
Model Name: MGT GEN2 Control Board

The following parameters can be set via the PC App's *Configuration* Window:

1) **Baud rate**
   9600, 19200, 38400, or 76800
2) **MAC address**
   Maximum value is 125.
3) **Instance number**
   Maximum value is 4194303.

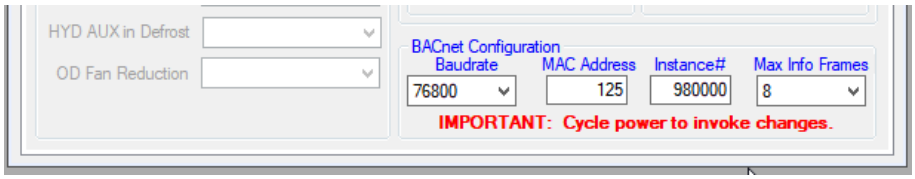

The BACnet parameter **Max_Master** has a fixed value of **127** in this device.

BACnet data is available regardless of the selected control method. In order to control the unit via the BACnet interface, set **Control Source** to ***BACnet*** either by using the PC App's configuration window or the LCD menus.

For tables listing BACnet objects, refer to **Application, Installation, and Service Manual**.

Engineering Guide Specifications

General

The water-to-water heat pump shall be a single packaged dual refrigeration circuit heating / cooling unit. The unit shall be listed by a nationally recognized testing laboratory (NRTL), such as UL, CSA, TUV, or ETL. The unit shall be rated in accordance with applicable standards of the Air Conditioning, Heating, and Refrigeration Institute / International Standards Organization (AHRI/ISO) and/or Canadian Standards Association (CSA). The liquid source water to water heat pump, as manufactured by Maritime Geothermal Ltd. of Petitcodiac, New Brunswick, Canada shall be designed to operate correctly within liquid temperature ranges specified on the “Minimum and Maximum Operating Temperatures” page of this engineering specification document.

Factory Quality

Each unit shall be run tested at the factory with water circulating in both indoor and outdoor loops. Quality control system checks shall include: computerized nitrogen pressurized leak test, evacuation of refrigeration circuit to sustained vacuum, accurate system charge, detailed heating and cooling mode tests, and quality cross check all operational and test conditions to pass/fail criteria. Units tested without water flow are not acceptable. The units shall be warranted by the manufacturer against defects in materials and workmanship in accordance with the warranty section at the end of this document. Optional extended factory warranty coverage may be available.

Cabinet

Each unit shall be constructed with a heavy duty standalone frame, and may optionally be enclosed in a sheet metal cabinet. Frame shall be constructed of powder coated galvanized sheet metal of minimum 11 gauge. Cabinet shall be constructed of powder coated galvanized sheet metal of minimum 16 gauge. Sheet metal gauge shall be higher where structurally required. Design and construction of cabinet shall be such that it is rigid and passes the CSA/UL Loading Test requirements (200 lb roof test and 25 lb guard test). All panels shall be lined with minimum 1 inch [25.4 mm] thick acoustic type glass fiber insulation. All insulation shall meet the fire retardant provisions of NFPA 90A. This material shall also provide acoustical benefit. Any enclosure must have a minimum of six access panels for serviceability of the compressor compartment. Enclosures having fewer than six access panels to compressor/heat exchangers/expansion device/refrigerant piping shall not be acceptable. The electrical box shall have separate holes and knockouts for entrance of line voltage and low voltage control wiring. All factory-installed wiring passing through factory knockouts and openings shall be protected from sheet metal edges at openings by plastic grommets.

Refrigerant Circuit

All units shall contain two separate sealed refrigerant circuits, each containing a hermetic motor scroll compressor, one electronic expansion valve, factory installed high and low pressure sensors, service ports, solid core filter-dryer, sight glass, reversing valve (for reversing units), and suction accumulator. Refrigerant circuits shall share true dual circuit brazed plate heat exchangers.

Refrigerant used shall have a global warming potential (GWP) of less than 700 and shall have an A1 classification (non-flammable).

Compressors shall be specified for heat pump duty with internal isolation consisting of rubber vibration isolators. Compressor motors shall have internal overload protection.

The water to refrigerant heat exchangers shall be of a stainless steel brazed plate design, designed and certified for 650 psig [4480 kPa] working pressure on the refrigerant side and 650 psig [4480 kPa] on the water side. Heat exchangers shall be insulated over all of their outside surface with minimum 3/8” thick closed cell insulation. Insulation consisting of 1/8” closed-cell insulating tape shall not be acceptable.

The electronic expansion valves shall be of stepper-motor rather than pulsing type, and shall provide proper superheat control over the unit’s operating range with minimal deviation from superheat setpoint. The valves shall be controlled by electronic superheat controller(s) which provide operator-adjustable superheat and real-time LED/LCD display of current superheat. Superheat shall be determined through the suction pressure-temperature method. Externally mounted pressure controlled water regulating flow valves or thermostatic expansion valves (TXV’s) in place of electronic expansion valves are not acceptable.

The suction accumulators shall be insulated with minimum 3/8” thick closed cell insulation to prevent condensation. The accumulator’s internal oil return port shall be sized properly for the unit’s operating range. To ensure proper oil return, suction accumulator shall not be ‘oversized’.

Piping and Connections

The unit shall have two sets of primary water in and water out connections (outdoor and indoor). The primary connection type shall be stainless steel pipe for Victaulic connection.

All internal water and refrigerant piping shall be insulated with minimum 3/8” thick closed cell insulation. Insulation consisting of 1/8” closed-cell insulating tape shall not be acceptable.

Electrical

Controls and safety devices shall be factory wired and mounted within the unit. Controls shall include 24 volt alternating current (24VAC) activated compressor contactors, reversing valves, and 24VAC 100VA transformer with built in circuit breaker or fused on both primary and secondary sides. Units shall be name-plated for use with time delay fuses or circuit breakers. Unit controls shall be 24VAC and provide heating or cooling as required by the remote thermostat or controller. 3-phase protection shall be present in each unit to protect the compressor against loss of phase and reverse rotation. 3-phase protection shall be factory installed. Unit shall have dry contacts for controlling loop circulating pumps via an external 24VAC contactor. Unit shall provide remote fault indication to the control system via serial communication and fault messages on front panel LCD display.

Unit Control

The control system shall have the following features:

1. Anti-short cycle time delay on compressor operation. Time delay shall be a minimum of 5 minutes, for both thermostat demand and safety control reset starts. An override shall be provided to disable this delay for unit commissioning and testing purposes.
2. Random compressor start delay of 0-120 seconds on unit power up to facilitate starting multiple units after a power failure.
3. Flow switch on outdoor loop, and also on indoor loop for reversing units.
4. Compressor shutdown for high or low refrigerant pressures, low flow conditions and for phase protection faults.
5. Automatic intelligent reset: unit shall automatically restart 5 minutes after trip if the fault has cleared. Should a fault reoccur 3 times sequentially then permanent lockout shall occur, requiring cycling of the power to the unit in order to reset.
6. Manual reset high pressure in case of electronic board failure.
7. The low pressure shall not be monitored for the first 90 seconds after a compressor start to prevent nuisance safety trips.
8. 2 x 16 backlit Liquid Crystal Display (LCD) and four buttons for limited data access. Unit may be configured for stand alone operation with optional temperature sensor(s)
9. Universal Serial Bus (USB) port for full data access and diagnostic information, including real-time charting and data-logging

Maritime Geothermal works continually to improve its products. As a result, the design and specifications of any product may be changed without notice. Please contact Maritime Geothermal at 1-506-756-8135 or visit www.nordicghp.com for latest design and specifications. Purchaser’s approval of this data set signifies that the equipment is acceptable under the provisions of the job specification. Statements and other information contained herein are not express warranties and do not form the basis of any commercial contract or other agreement between any parties, but are merely Maritime Geothermal’s statement of opinion regarding its products.

Warranty: W/WH-Commercial Series

COMMERCIAL LIMITED EXPRESS WARRANTY

Unless a statement is specifically identified as a warranty, statements made by Maritime Geothermal Ltd. ("MG") or its representatives relating to MG's products, whether oral, written or contained in any sales literature, catalogue or agreement, are not express warranties and do not form a part of the basis of the bargain, but are merely MG's opinion or commendation of MG's products.
SET FORTH HERE IS THE ONLY EXPRESS WARRANTY THAT APPLIES TO MG'S PRODUCTS. MG MAKES NO WARRANTY AGAINST LATENT DEFECTS. MG MAKES NO WARRANTY OF MERCHANTABILITY OF THE GOODS OR OF THE FITNESS OF THE GOODS FOR ANY PARTICULAR PURPOSE.

LIMITED EXPRESS COMMERCIAL WARRANTY - PARTS
MG warrants its Commercial Class products, purchased and retained in the United States of America and Canada, to be free from defects in material and workmanship under normal use and maintenance as follows:
(1) Heat pumps / chillers built or sold by MG for one (1) year from the Warranty Inception Date (as defined below).
(3) Compressors of above units for five (5) years from the Warranty Inception Date (as defined below).
(4) Other accessories, when purchased separately, for (1) year from the date of shipment from MG.

The "Warranty Inception Date" shall be the date of original unit installation, as per the date on the installation Startup Record; or sixty (60) days from date of unit shipment from MG, whichever comes first.

To make a claim under this warranty, parts must be returned to MG in Petitcodiac, New Brunswick, freight prepaid, no later than ninety (90) days after the date of the failure of the part. If MG determines the part to be defective and within MG's Limited Express Commercial Warranty, MG shall, when such part has been either replaced or repaired, return such to a factory recognized distributor, dealer or service organization, freight prepaid. The warranty on any part repaired or replaced under warranty expires at the end of the original warranty period.

LIMITED EXPRESS COMMERCIAL WARRANTY - LABOUR
MARITIME GEOTHERMAL LTD. will not be responsible for any consequential damages or labour costs incurred.

This warranty does not cover and does not apply to:
(1) Air filters, fuses, refrigerant, fluids, oil.
(2) Products relocated after initial installation.
(3) Any portion or component of any system that is not supplied by MG, regardless of the cause of the failure of such portion or component.
(4) Products on which the unit identification tags or labels have been removed or defaced.
(5) Products on which payment to MG, or to the owner's seller or installing contractor, is in default.
(6) Products subjected to improper or inadequate installation, including but not limited to:
- Indoor or outdoor loop flow lower than listed in engineering specification or as expressly approved by MARITIME GEOTHERMAL LTD.
- Operating the heat pump either manually or with automated controls so that the unit is forced to function outside its normal operating range
- Disabling of safety controls
- Insufficient loop antifreeze concentration for loop temperature, or antifreeze concentration incorrectly set in control board
- Fouled heat exchangers due to poor water quality
- Failure to use strainers or clean them regularly
- Impact or physical damage sustained by the heat pump
- Poor refrigeration maintenance practices, including brazing without nitrogen flow, or using wrong braze/flux
- Incorrect voltage or missing phase supplied to unit
- Unit modified electrically or mechanically from factory supplied condition
- Water quality outside of recommended limits (e.g. salinity or pH)
- Unit not mounted with supplied anti-vibration grommets when specified for use
- Corrosion damage due to corrosive ambient environment
- Failure due to excessive cycling caused by improper mechanical setup or improperly programmed external controller
- Physical loads or pressures placed on unit from external equipment

(7) Mold, fungus or bacteria damage
(8) Corrosion or abrasion of the product.
(9) Products supplied by others.
(10) Electricity or fuel, or any increases or unrealized savings in same, for any reason whatsoever.

MG is not responsible for:
(1) The costs of fluids, refrigerant or system components **supplied by others**, or associated **labour** to repair or replace the same, which is incurred as a result of a defective part covered by MG's Limited Commercial Warranty.
(2) The costs of **labour**, refrigerant, materials, or service incurred in diagnosis and removal of defective part, or in obtaining and replacing the new or repaired part.
(3) Transportation costs of the defective part from the installation site to MG, or of the return of that part if warranty coverage declined.
(4) The costs of normal maintenance.

MG'S LIABILITY UNDER THE TERMS OF THIS LIMITED WARRANTY SHALL APPLY ONLY TO THE MG UNITS REGISTERED WITH MG THAT BEAR THE MODEL AND SERIAL NUMBERS STATED ON THE INSTALLATION START UP RECORD, AND MG SHALL NOT, IN ANY EVENT, BE LIABLE UNDER THE TERMS OF THIS LIMITED WARRANTY UNLESS THIS INSTALLATION START UP RECORD HAS BEEN ENDORSED BY OWNER & DEALER/INSTALLER AND RECIEVED BY MG LIMITED WITHIN 90 DAYS OF START UP.

Limitation: This Limited Express Commercial Warranty is given in lieu of all other warranties. If, notwithstanding the disclaimers contained herein, it is determined that other warranties exist, any such express warranty, including without imitation any express warranties or any implied warranties of fitness for particular purpose and merchantability, shall be limited to the duration of the Limited Express Commercial Warranty.

LIMITATION OF REMEDIES
In the event of a breach of the Limited Express Commercial Warranty, MG will only be obligated at MG's option to repair the failed part or unit, or to furnish a new or rebuilt part or unit in exchange for the part or unit which has failed. If after written notice to MG's factory in Petitcodiac, New Brunswick of each defect, malfunction or other failure, and a reasonable number of attempts by MG to correct the defect, malfunction or other failure, and the remedy fails of its essential purpose, MG shall refund the purchase price paid to MG in exchange for the return of the sold good(s). Said refund shall be the maximum liability of MG. **THIS REMEDY IS THE SOLE AND EXCLUSIVE REMEDY OF THE BUYER OR PURCHASER AGAINST MG FOR BREACH OF CONTRACT, FOR THE BREACH OF ANY WARRANTY OR FOR MG'S NEGLIGENCE OR IN STRICT LIABILITY.**

LIMITATION OF LIABILITY
MG shall have no liability for any damages if MG's performance is delayed for any reason or is prevented to any extent by any event such as, but not limited to: any war, civil unrest, government restrictions or restraints, strikes, or work stoppages, fire, flood, accident, shortages of transportation, fuel, material, or labour, acts of God or any other reason beyond the sole control of MG. **MG EXPRESSLY DISCLAIMS AND EXCLUDES ANY LIABILITY FOR CONSEQUENTIAL OR INCIDENTAL DAMAGE IN CONTRACT, FOR BREACH OF ANY EXPRESS OR IMPLIED WARRANTY, OR IN TORT, WHETHER FOR MG's NEGLIGENCE OR AS STRICT LIABILITY.**

OBTAINING WARRANTY PERFORMANCE
Normally, the dealer or service organization who installed the products will provide warranty performance for the owner. Should the installer be unavailable, contact any MG recognized distributor, dealer or service organization. If assistance is required in obtaining warranty performance, write or call Maritime Geothermal Ltd.

NOTE: Some states or Canadian provinces do not allow limitations on how long an implied warranty lasts, or the limitation or exclusions of consequential or incidental damages, so the foregoing exclusions and limitations may not apply to you. This warranty gives you specific legal rights, and you may also have other rights which vary from state to state and from Canadian province to Canadian province.